JOURNAL

OF THE ELECTRICITY DEPARTMENT GOVERNMENT OF MADRAS

VOL. IX — JULY—SEPTEMBER 1954 — No. 2

CONNEMARA PUBLIC

EDITOR

K. V. KARANTHA, M.A., M.I.E. . . . *Chief Electrical Inspector to Government.*

MEMBERS OF THE ADVISORY COMMITTEE

N. R. NARASIMHAMURTHI, B.SC., B.E. . . . *Chief Operation Engineer (North).*

M. B. KANDASWAMI, B.A., B.E., M.E. (Hons.), M.I.E. (Ind.),
Chief Operation Engineer (South).

A. R. NARAYANA RAO, B.E. (MECH.), M.I.E.E., M.I.E. (Ind.),
Superintending Engineer (Distribution), Madras Electricity System.

P. V. A. NARAYANAMURTHY, B.SC.,
Superintending Engineer (Generation), Madras Electricity System.

P. R. SUNDARAM, B.E. . . . . *Superintending Engineer, Technical (Electrical).*

The Department is not responsible for any statement made or opinion expressed in this Journal.

CONTENTS

PAGE

FAULT THROWING SWITCHES FOR PROTECTION OF TRANSFORMERS 47
Sri V. P. APPADURAI, B.A., M.I.E. (Ind.), and Sri L. R. SAPTHARISHI, B.E. (Hons.).

PROGRESS DURING QUARTER ENDING 31ST MARCH 1954 . . . 57

THE GOVERNMENT ELECTRICITY DEPARTMENT IN 1952–53 . . . 61

ELECTRICITY SUPPLY IN INDIA, 1952 66

ELECTRIC POWER IN MYSORE 69

EXTRACT FROM SPEECH OF SHRI KANWAR SAIN, PRESIDENT, CENTRAL BOARD OF IRRIGATION AND POWER 70

PAGE

TECHNICAL PRESS—
Electricity Supply in M.S. America, 1953 72
The Engineer and His Profession 73
Hydro Power: Key to Japan's Economy 74
Nylon Safety Straps Win out in Tests 75
Electric Incandescent Lamp Industry 76
Electricite De France Offers Electric Dividends 76
T.V.A.'s New Microwave Facilities 77
Introduction of Electric Cremation in India 77
The Annual Consumption and Cost of Electricity in the United States in 1951 77
Rural Electrification Finance —Its Practice Abroad 78
Wide Latitude Insulation Shown in Survey 79
Tubewell Scheme, Uttar Pradesh 80
Technical Tit-bits 81

SOCIAL AND PERSONAL 84

NOTES FOR THE GUIDANCE OF AUTHORS OF ARTICLES CONTRIBUTED FOR THE JOURNAL

Articles or papers should be authoritative and when describing works, the information should be accurate. Normally, articles or papers, already published in other journals are not accepted. In any case, the fact of the articles or any part thereof having been published previously must be indicated clearly in the forwarding letter. All manuscripts should be typewritten (double spacing) on one side of the paper only, with a margin of at least two inches. Manuscripts must bear the signature of the author (or the signatures of the authors). The title of the paper should not be long. If necessary, use a main title and a sub-title. No abbreviation should be used except those of a universal character. Numbers given to equations and formulæ in an article or paper should be assigned in order of occurrence in the paper. Symbols should be in accordance with the standard notations, unless there is specific reason for the contrary. The meaning of each symbol should be explained where first used and in case many symbols are used, a list should be provided in addition, in the beginning. Detailed references should be given to quotations. If numerous, these can be collected at the end, otherwise these should be placed as footnotes. References should be indicated by numbers, e.g., (4), (5), etc. Explanations given in footnotes should be indicated by signs, e.g., *, †, and not by numbers.

The authors of papers and articles are requested to scrutinize carefully the typed or cyclostyled copies before forwarding them. Equations and formulæ are best inserted in hand. Two sets of drawings should accompany an article. One set should be mere line-work without any lettering and the other complete with lettering, the former preferably on tracing cloth. Colour, wash or line and pencil shades cannot be reproduced in line blocks. They should be replaced by hatching and colour lines by dashed chain or thicker black lines. The size of drawings or line blocks should generally be double the size to be reproduced in print.

It is desirable that the use of the first person should be avoided. When a specific statement is to be made, it should be written: " The author submits . . . . ", " The author holds the opinion . . . . . ", etc. It is desirable that articles or papers should be sectionalized by giving suitable 'sectional headings'. Avoid long and involved sentences; short sentences are more effective and less likely to be misinterpreted. Do not begin a new sentence with a numeral, write the number in full as word. Place zero before the decimal point when the figure represents something less than unity; thus :—0·75. Place a comma to mark the thousands in number of four figures and more; thus: 2,127,356, and, in the case of Rs. thus: 27,26,127. Do not write in the text of the article 8′6″ by 4′3″ but as 8 feet 6 inches by 4 feet 3 inches or as 8·5 feet by 4·25 feet. For numbers under 10—write out in full, if not followed by an abbreviation; thus, write nine days, but 9 lb., not nine lb. For numbers over ten use numerals; thus 50 days.

MADRAS: PRINTED BY THE SUPERINTENDENT, GOVERNMENT PRESS

CONN... DEC 958 ... MADRAS

Fault Throwing Switches for Protection of Transformers

By V. P. APPADURAI, B.A., M.I.E. (Ind.),
Chief Engineer for Electricity
and
L. R. SAPTHARISHI, B.E. (Hons.),
Assistant Engineer (Electrical).

THIS ARTICLE deals with the installation of fault throwing switches for the protection of power transformers at E.H.T. and H.T. substations which are arranged as taps off a single circuit transmission line. The practice of the Department in this regard has so far been to provide on the high voltage side a single circuit breaker for the group control of the entire bank of transformers and on the low voltage side individual breakers for each transformer. When the capacity of the transformer is below 2,000 K.V.A. the breakers are dispensed with and fuse protection alone is provided.

The above arrangement, though standard, appears rather elaborate when compared with the latest practice obtaining in Canada, T.V.A., Hydro Electric Commission of Ontario and the British Electricity Authority in respect of similar installations. The important deviation from our practice in the scheme adopted by the above authorities is the omission of the group control circuit breaker on the high voltage side of the power transformers at substations tapped off single circuit lines.

For similar conditions in the stations abroad, the layout and equipment adopted is generally as indicated in Fig. 1.

The circuit breaker on the high voltage side is eliminated by providing instead, a fast operating single pole high voltage fault throwing switch, operating in conjunction with a 110 K.V. automatic air break switch, installed ahead of the former. For any fault in the transformer, the protective relays on the H.V. or L.V. side of the transformer cause the operation of the automatic fault throwing single pole switch which creates a fault to ground on one of the phases of the incoming 110 K.V. line. This results in the immediate operation of the ground relay at the sending end of the line and consequent tripping of the 110 K.V. line breaker. Following the closure of the automatic grounding switch, the 110 K.V. air break switch controlling the 110 K.V. transformer bus opens out automatically after a pre-determined time delay of, say, 5 seconds (capable of being adjusted, say, from 3 to 10 seconds) to adequately allow for the 110 K.V. line breaker to positively trip out. The opening of the air

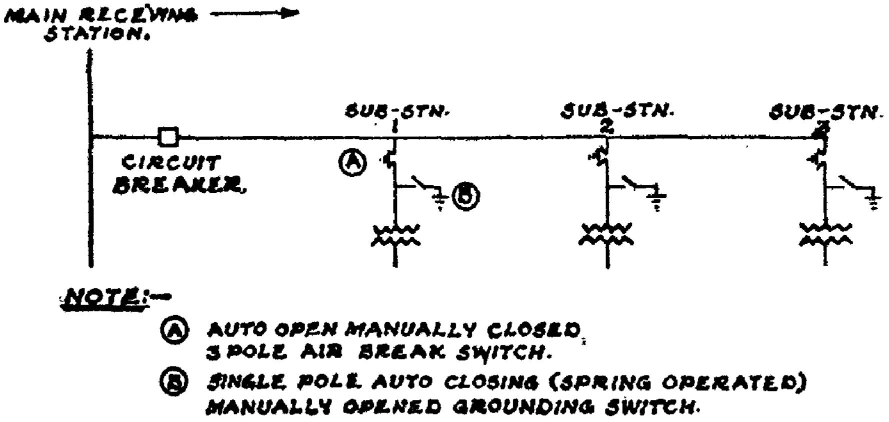

FIG. I
LAY OUT OF SUB-STATIONS WITH FAULT THROWING SWITCHES.

break switch will thus occur only when the incoming line *is dead.*

At the sending end, the 110 K.V. line O.C.B. that has tripped recloses automatically after a predetermined interval during which time the substation with the faulty transformer gets completely isolated from the line by the operation of the automatic air break switch mentioned above. Supply is thus restored to the other stations, tapped off the line. At the substation that is disconnected from the line, the operator locates the faulty transformer from the relay indication and isolates the same from the transformer bus. The fault throwing switch is then opened out and the main 110 K.V. air break switch closed in, thus resuming supply with the remaining transformers.

The sequence of closing of the fault throwing switch, tripping of the line breaker, opening of the air break switch at the affected station, reclosing of the line breaker at the sending end, are all timed and co-ordinated so that interruption to service is minimum and damage to equipment is avoided by quick isolation.

At first sight, this method of protection may look rather odd, as a dead fault is created on the line, to trip the line in the event of a fault in the transformer.

It may be pointed out that this is in no way more serious than the ground faults that occur on lines during normal operation and so long as the grounding is effected only for internal faults on transformers, which are rare, the incidence of such grounding is comparatively much less than the occurrence of ground faults on the line. This method does not therefore impose greater shock to the system than normal ground faults on lines and can therefore be adopted safely in single line fed substations.

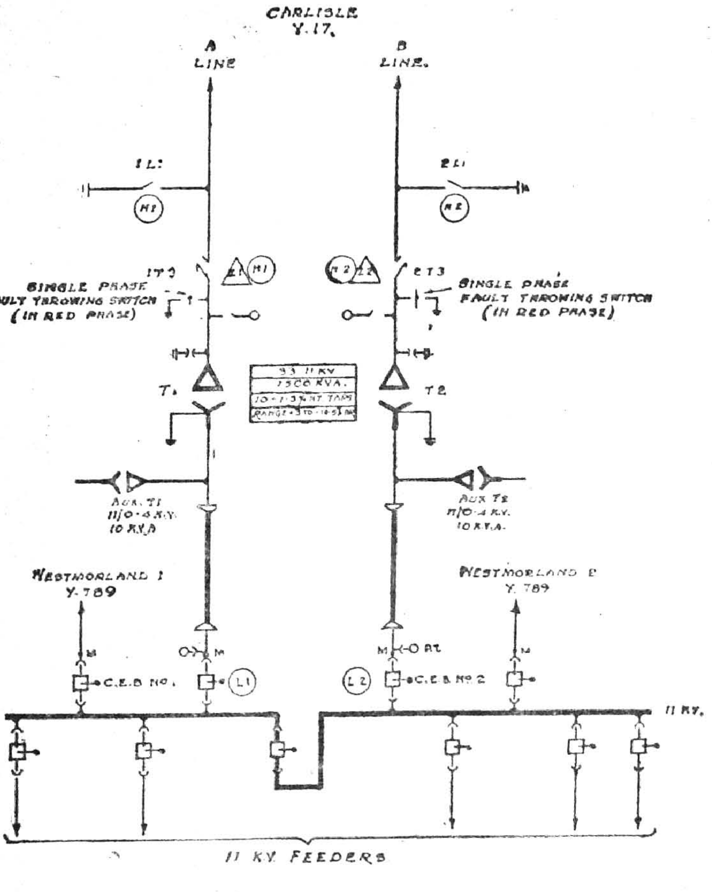

FIG-2.
PENRITH SUBSTATION
CENTRAL ELECTRICITY BOARD. UK.

EXTRACTED FROM CENTRAL ELECTRICITY BOARD' DRG NO Y.122 DATED: 25-4-33.

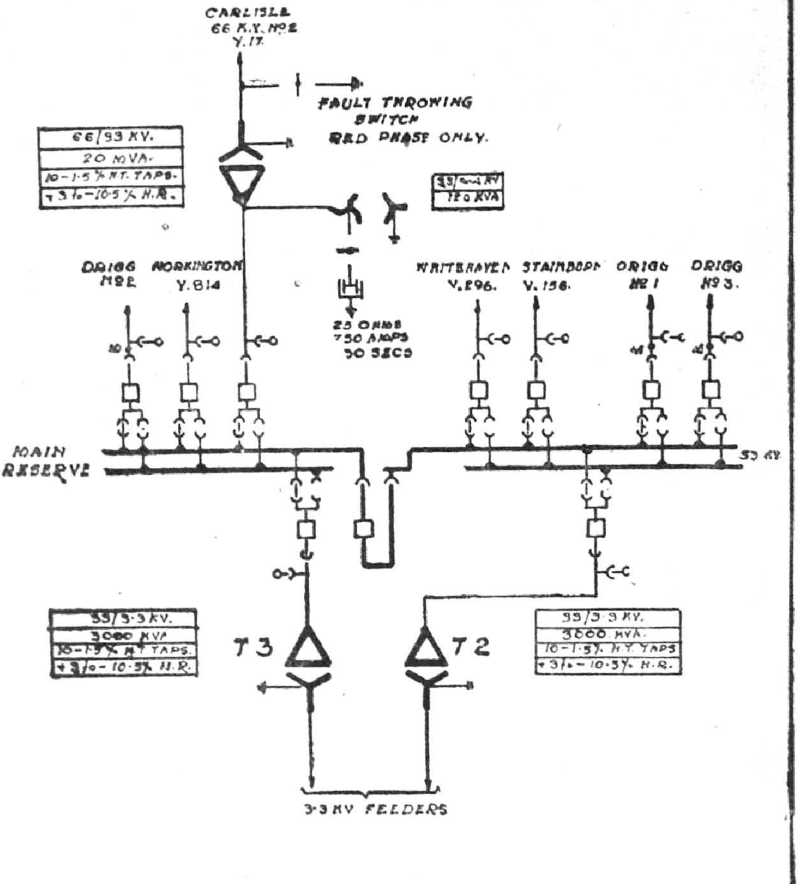

FIG-3.

EGREMONT SUB-STATION
CENTRAL ELECTRICITY BOARD U.K.

EXTRACTED FROM CENTRAL ELECTRICITY
BOARD DRG. No. Y 62. DATED: 11-11-41.

This method of protection for the transformers is extensively in use in the Shawinigan Water and Power System and the Hydro-Electric Power Commission of Ontario in Canada, in the Bureau of Reclamation and to some extent in the Tennesse Valley Authority in the United States and widely in the British Electricity Authority, England.

British Electricity Authority.—In the British Electricity Authority, this method of protection for transformers is employed extensively as an alternative and in preference to the conventional inter-tripping schemes, which employ coded signals transmitted over pilot circuits rented from the G.P.O. and they are in use for operating voltages up to 132 K.V. and for fault currents (Symmetrical) at the point of application of the fault throwing switch upto 6,500 amps.

The fault throwing switch is spring operated or D.C. motor operated for closing. A padlocked push button is provided on the mechanism box as a means of operating the release mechanism manually. For resetting the switch to the open position, an operating handle (manual operation) is provided and in this operation, the springs are automatically recharged. A latch located in the operating mechanism holds the switch in the normal (open) position. For maintenance purpose, the switch is capable of being closed slowly under manual control and also of being positively locked in the open position.

A sufficient number of auxiliary switches are provided for purposes of indication and interlocking. There are a number of stations with fault throwing switches for the protection of transformers of capacities 3,000 KVA., 7,500 KVA., 25,000 KVA., etc., with rated voltages up to 132 KV. The layouts of some stations where fault throwing switches are actually in service in the B.E.A. are indicated in Figures 2 and 3.

Shawinigan Water and Power System, Canada.—Fault throwing switches for the protection of transformers 3 × 36,000 KVA. (3 single phase units) 11 KV/230 KV have been adopted even at their power stations like Rapid blanc, Trenche, etc., in addition to a number of substations fed by single circuit lines 33, 66, 88, 115 and 230 KV.

2. *Hydro-Electric Power Commission of Ontario, Canada.*—Transformers have been connected to a line without the use of a breaker. In order to clear such a transformer on the H.V. side, a single phase grounding switch is used, which is automatically closed by the transformer protection. This throws a line to ground fault on the line which operates the ground relay at the sending end of the line and trips the line out, thus clearing the faulty transformer. Following the closure of the automatic ground switch, the H.V. air break switch of the transformer opens automatically within a time delay of 6 seconds so that the line can be restored to service immediately.

The layout of the north-eastern region of the Hydro-Electric Power Commission, Ontario, where fault throwing switches have been used in generating stations and on

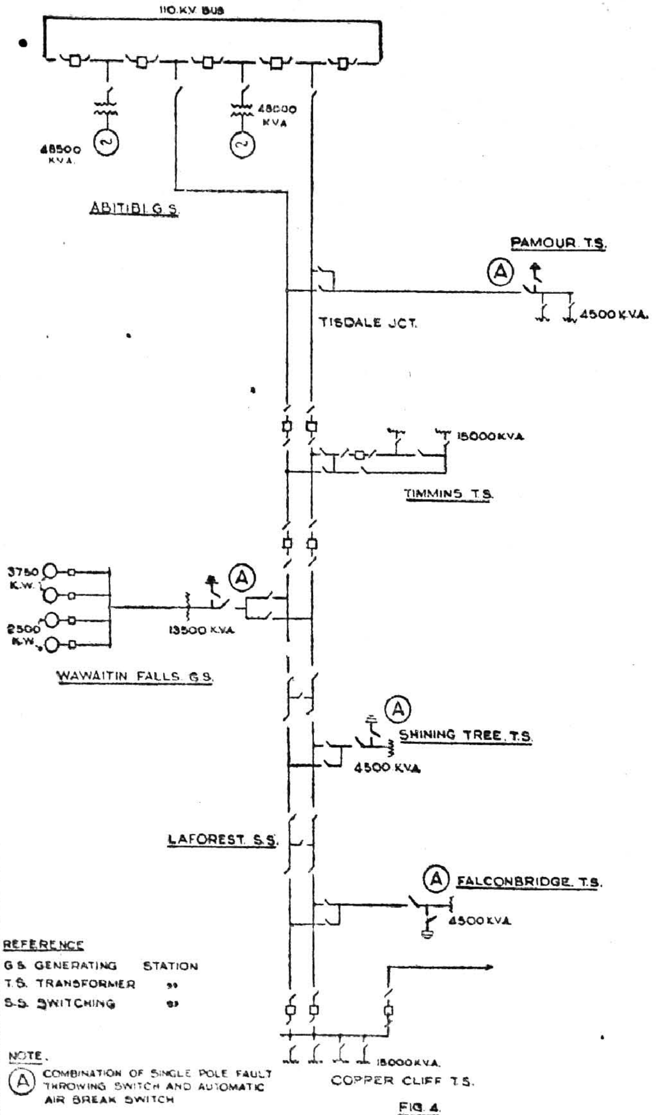

FIG. 4.

HYDRO ELECTRIC POWER COMMISSION
OF ONTARIO
NORTH EASTERN REGION

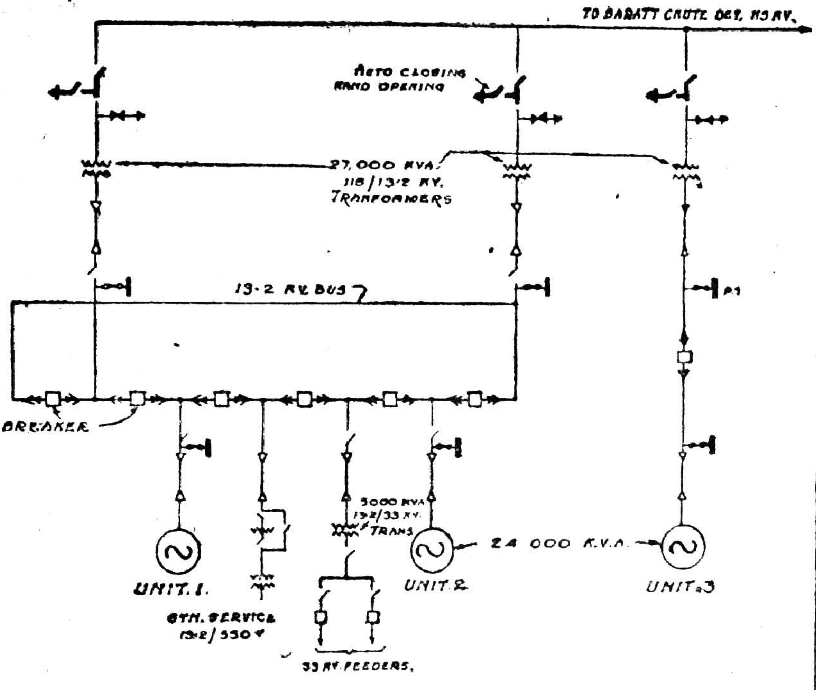

NOTE:-
COMBINATION OF SINGLE POLE FAULT THROWING SWITCH
AND AUTOMATIC AIR BREAK SWITCH SHOWN IN THICK LINES

FIG. 5.
STEWARTVILLE DEVELOPMENT
THE HYDRO-ELECTRIC POWER COMMISSION OF ONTARIO

sub-stations tapped on main interconnections is shown in Fig. 4. In the Stewartville Development, a major power station with 3 Nos. 24,000 K.V.A. units, fault throwing switches have been used for the protection on the HV side of the 27,000 K.V.A. 13·2 KV./115 KV. step up transformers. The layout of this station is shown in Fig. 5.

Up to 1949, there were in all about 33 stations in which automatic grounding switches had been used and construction was proceeding in nine other stations. The combined experience on these switches, since the first one was installed in 1930, was a total of 260 switch years and the combined capacities of the transformers at these stations was 643, 500 KVA.

Electricite De France.—Fault throwing switches are in operation in France for 220 KV transformer banks even at power stations such as Chastang and Bort Les Orgues. The total installed capacity at Chastang Power Station is 220,000 KW. and this station along with other power stations of the Massif Central is connected to Paris by an E.H.T. line operating now at 220 KV. with provision for future operation at 380 KV. This station is at the end of the line and there is no circuit breaker on the H.V. side. The nearest breaker is at La Breuil Sub-station (at a distance of 16 miles from Chastang) which operates on the closure of the 220 KV. fault throw switch at Chastang. The short circuit MVA. at La Breuil is 5,000 MVA.

The Bureau of Reclamation U.S.A.—The Bureau of Reclamation U.S.A. have utilised this arrangement in some of their substations, where a spring operated grounding switch protects the transformer against internal faults by means of differential relays.

T.V.A. U.S.A.—There are a few installations with fault throwing switches in the T.V.A. also, though this method of protecting the transformers is not so extensive in this area as in Canada or England.

The above information gathered from the practices abroad and the latest literature on the subject indicates the wide usage of the fault throwing switch in important installations without any adverse result. They are ideal for use on substations tapped off single circuit radial feeders. They have been adopted in foreign power systems even for substations in interconnectors and at power stations as well. The main advantage is the saving in expenditure on the high voltage breaker.

The Erode-Salem-Rasipuram-Namakkal 110 KV extensions which has been recently taken up for execution, adapts itself very well for this method of fault throwing switch protection of power transformers. There are three stations within 15 miles of each other on a single circuit line. The layout of the switch gear in the above extensions as originally contemplated is indicated in Fig. 6. This layout provides for 110 KV group control circuit breakers for the transformer banks at Salem, Rasipuram and Namakkal and also a line breaker at Salem for isolating the Salem-Namakkal section of the line if required in times of emergency and

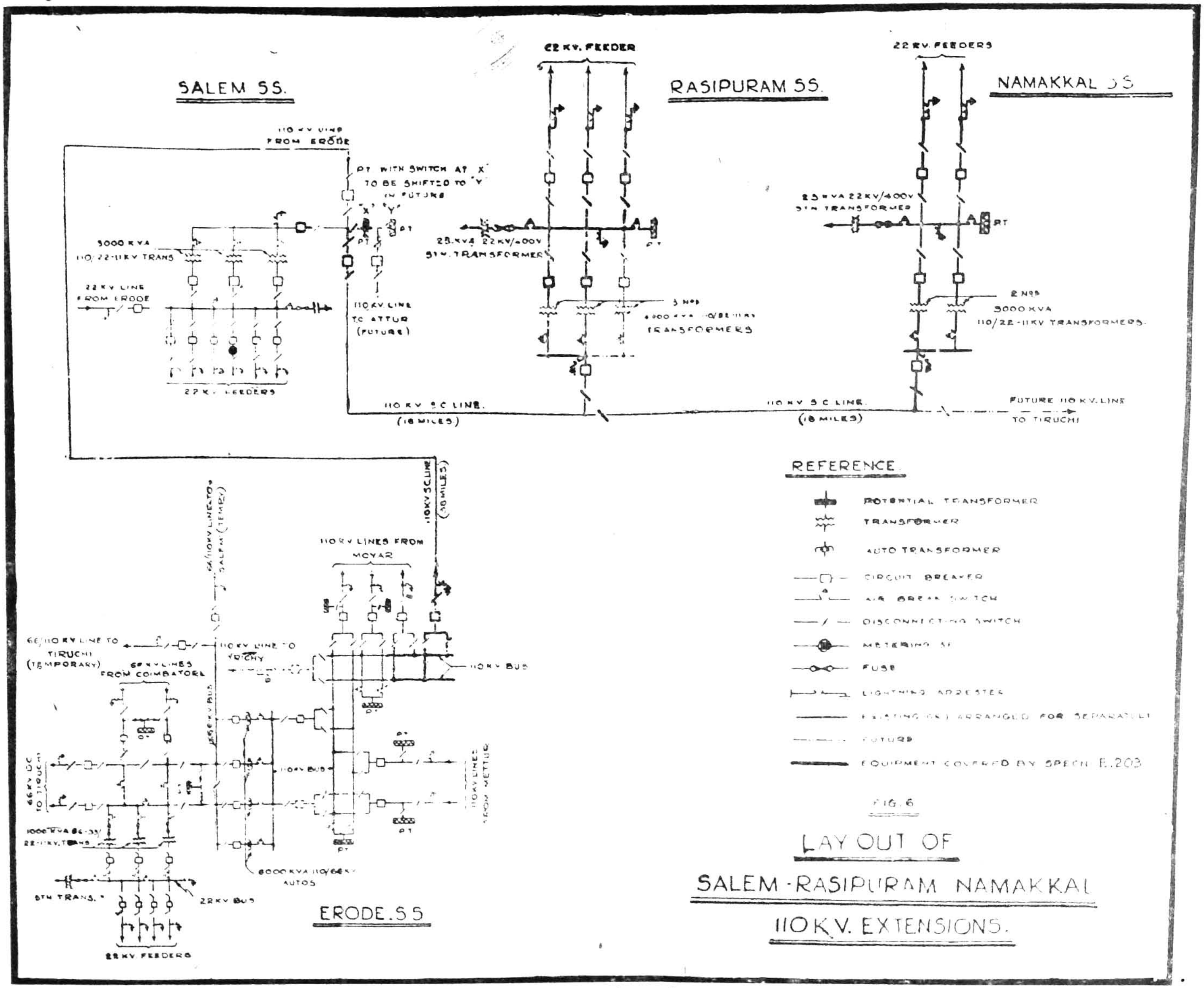

FIG. 6

LAY OUT OF

SALEM-RASIPURAM NAMAKKAL

110 K.V. EXTENSIONS.

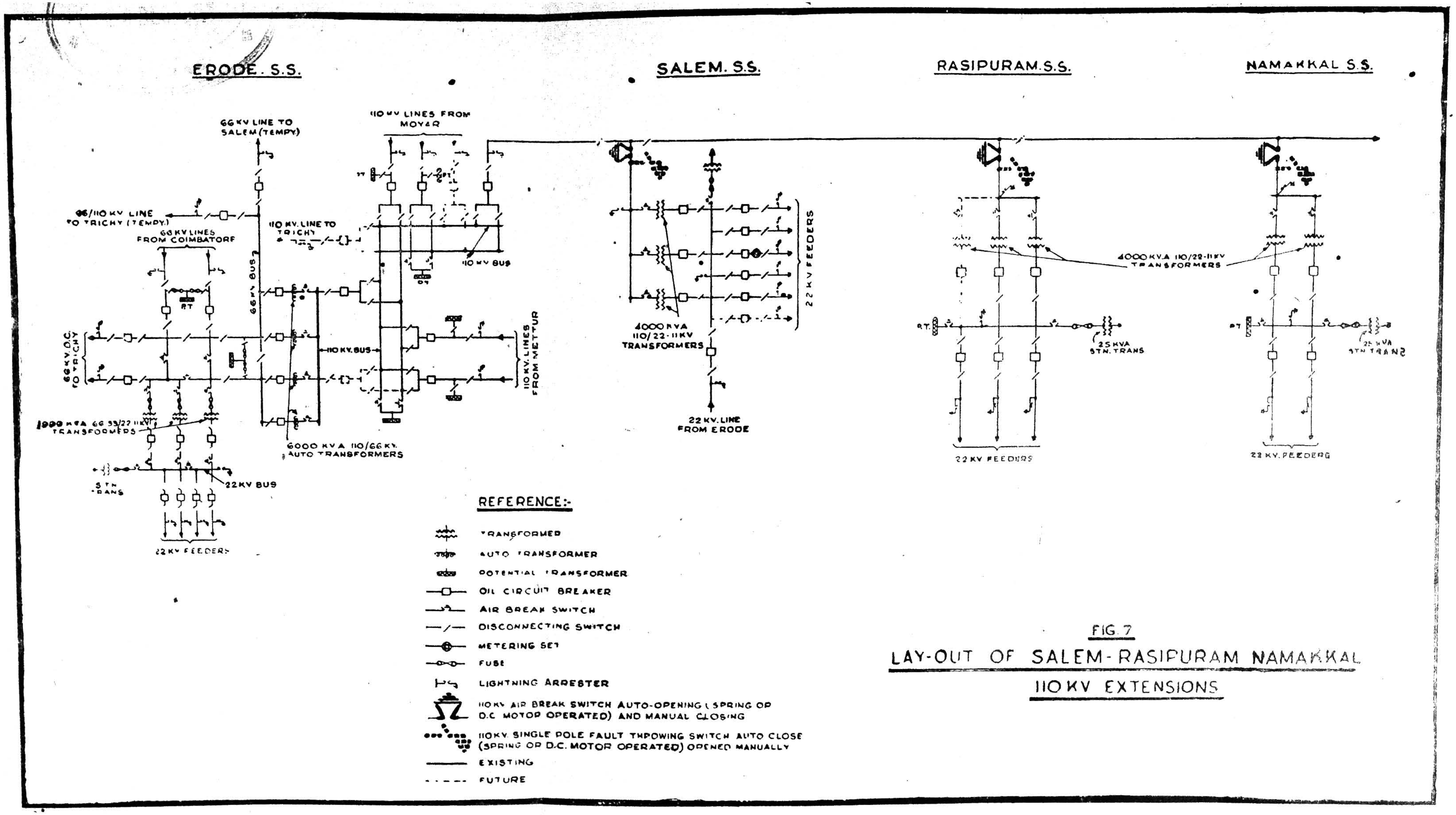

FIG. 7

LAY-OUT OF SALEM-RASIPURAM NAMAKKAL 110 KV EXTENSIONS

for faults. In the scheme with fault throwing switches, the 110 KV. transformer control breaker and the 110 KV. isolator ahead of the breaker will be replaced by a fault throwing switch and an automatic air break switch. The cost of a fault throwing switch and the air break switch ahead of it is about Rs. 15,000 as against Rs. 1,00,000, the cost including foundations for a 110 KV. breaker. There is thus a saving of about Rs. 85,000 per station if a fault throwing switch is adopted instead of a circuit breaker for isolating the transformer.

As this method of protection is extensively in use in foreign countries and in view of the considerable saving, it has now been proposed to adopt this method in the Salem-Namakkal extensions. The revised layout of the extensions with fault throwing switches is shown in Fig. 7. In the revised layout the 110 KV. line breaker for the outgoing line at Salem is also omitted. The total saving in cost is about Rs. five lakhs. The saving is effected without in any way reducing the safety and protection of equipment contemplated in the original arrangement.

In the revised scheme the air blast circuit breaker at Erode on the outgoing line to Salem will control, besides the line, all the power transformers at the three substations. Though it is possible to have auto reclose feature in this breaker, it is proposed to have the reclosing done by the operator who will enquire over phone the substations before reclosing the breaker. This is by way of additional precaution till adequate experience is gained by the Department in regard to the operation of the fault throwing switches. Impedance time protection for phase and earth faults is provided for the 110 KV. feeder and the operation of the fault switch at any of the substations will correspond to an earth fault.

At the substations, each power transformer is provided with over current, thermal and earth leakage relays on the high voltage side and over current, thermal and restricted earth fault protection relays on the low voltage side. The current transformers on the H.V. side are incorporated in the H.V. bushings of the transformers and those on the L.V. side in the 22 KV. O.C.B. bushings. Each transformer is also fitted with a double float Buchholz relay with alarm and surge contacts. The operation of the thermal relay of any transformer is arranged to trip only the 22 KV. control O.C.B. of the transformer thereby releasing load off the transformer. The operation of any one of the other relays, viz., the over-current relays on H.V. and LV. side, the restricted earth fault relay and the Buchholz surge contacts, is arranged to close the circuit of an auxiliary tripping relay which simultaneously trips out all the 22 KV. transformer control breakers and causes the closure of the automatic fault throwing switch.

The precautions to be observed in the installation of H.V. fault throwing switches are as follows :—

1. Suitable interlocks (electric or mechanical) should be provided between the automatic fault throwing switch and the automatic air break switch, so that—

(a) the main air break switch should not be capable of being closed if the fault throwing switch is in the closed position. It should, however, be possible for the fault throwing switch to close when the air break switch is in the closed position,

(b) the fault throwing switch cannot be opened out from the closed position if the main air break switch is not opened. Auxiliary switches will be provided in the operating mechanism of the fault throwing switch and automatic air break switch for interlocks and for remote indication and alarm,

(c) it should not be possible to close any breaker on the low voltage side of the transformer when the fault throwing switch is closed.

In addition to the co-ordination of the sequence between the tripping of the breaker and the opening of the air break switch, by the time delay relays, a suitable fool proof device can be provided to ensure that the air break switch opens out only after the line breaker trips out. The device can be in the form of a current relay, the contacts of which are arranged to complete the control circuit for opening out of the air break switch only when the current flowing to ground past the fault throw switch is zero. A schematic diagram showing the various relays and interlocks and auxiliary circuits for the scheme with fault throw switch is given in Fig. 8.

2. One of the station earth pits should be located very near the fault throwing switch and the main earth connection from the switch contact connected to the earth plate or rod in the pit by a short and direct copper earth connection of adequate sectional area to carry the maximum fault current without damage. The sectional area should not in any case be less than 0·25 square inch.

3. The main connections to earth should be lightly insulated from the switch base and the structure should be protected for at least 8 feet from ground level by an earthed screen.

4. An earthed mat should preferably be buried as near the surface as possible to cover the area, where an operator may be required to stand. The mat should be connected directly to the operating mechanism on the box of the fault throwing switch and to the substation earthing system by separate connections.

5. The base of the switch should be connected to the earthing system of the substation in the same manner as for the isolating switch gear.

6. The fault throwing switches should be mounted as high as standard layouts permit as a precaution against any molten metal being thrown when the switch operates. The height of the switch base above ground should not be less than 12 feet.

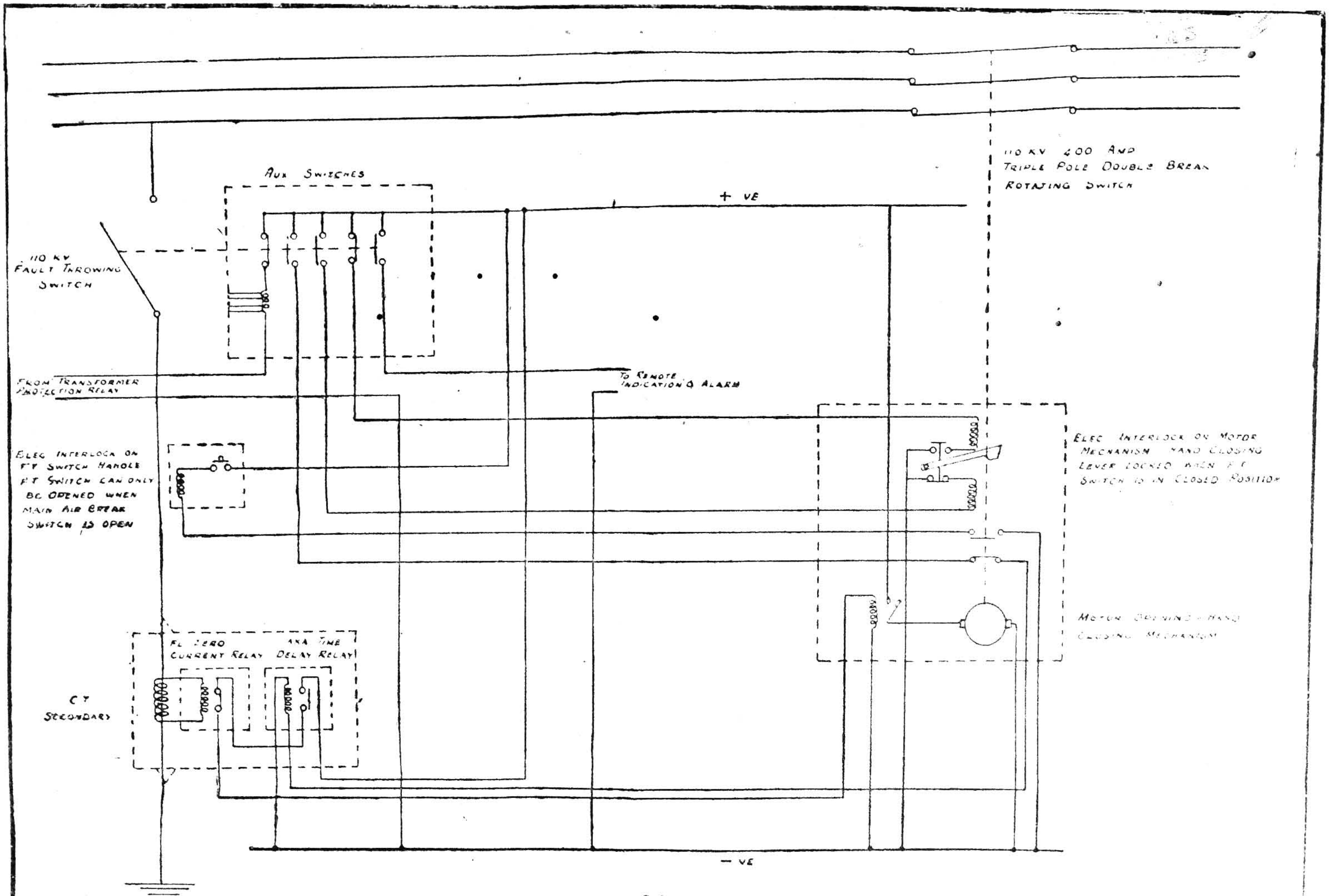

FIGURE - 8

SCHEMATIC DIAGRAM FOR PROPOSED 110 KV

FAULT THROWING SWITCH PROTECTION SCHEME

SALEM - NAMAKKAL EXTENSIONS

Progress During Quarter Ending 31st March 1954

THE DEPARTMENT earned a revenue of Rs. 132·24 lakhs during the quarter and the working expenses including suspense and contribution to reserve amounted to Rs. 53·47 lakhs. The capital expenditure during the quarter was Rs. 80·55 lakhs.

The Planning Commission intimated the inclusion of the Periyar hydro electric scheme in the First Five-Year Plan.

The Department participated in the Kancheepuram Municipal Exhibition held at Kancheepuram from 9th to 30th March 1954.

Construction Branch

Pykara Plant Extensions III Stage.—Masonry in main dam and up-stream wing wall was in progress. Concreting of R.C.C. core wall, R.C.C. diaphragm wall, earthen embankments on upstream and down-stream side of dam were in progress. Erection of the 4th penstock line with its valves was completed. Construction of Singara power house building and R.C.C. acqueduct across Pykara flume at Glenmorgan was completed. The erection of the sixth and seventh generation units is in advanced stage of progress.

Madurai Thermal Scheme.—Erection of the two new Steinmullers 55,000 lb/hr. boilers was completed. Boiler No. 1 was commissioned on 13th March 1954 and boiler No. 2 on 20th March 1954, and both the boilers were on range taking load.

Transmission Lines and Substations—Erode-Salem Extension—Salem substation.—Erection of all the equipments for the first two bays was completed.

The Tiruchirapalli-Dalmiapuram telephone line was completed and taken over for operation.

South Kanara Scheme.—Jungle clearance, check survey, excavation for foundation of towers, stub setting and concreting and erection of towers were in various stages of progress (1) on the Hulikal-Mangalore 110 KV. line, (2) Hiriadka-Udipi and (3) Hiriadka Karkala 33 KV. lines. Land acquisition proposals for Mangalore, Udipi and Hiriadka substations were instituted with the Collector. Tower parts and other line materials were being received at Mangalore and transported.

Pykara-Coimbatore-Madurai 110 *KV. Line*—(*a*) *Pykara-Coimbatore reach*—Tree clearance, concreting of tower section, earthing and stringing were continued in the hill section, i.e., between Pykara and Nellithorai.

(*b*) *Coimbatore-Madurai reach.*—Major portion of the erection of the line was over.

Mettur-Workshop Expansion Scheme.—All works connected with the workshop expansion and 84 per cent of erection of machinery were completed.

Madras Plant Extensions.—Under the first stage extensions all the works were completed. Official acceptance tests for the boilers were commenced on 29th March 1954.

Under the second stage extensions erection of one boiler was nearing completion. Erection of the turbo-alternator was in progress.

Madras-Mettur Interconnection Scheme.—At Kancheepuram, R.C.C. structure for outdoor station yard and control room was completed.

Operating Systems

Hydro Systems.

Generation.—The station peak load, system peak load and the units generated during the quarter were as follows:—

Name of system station.	*Station peak load in KW.*	*Units generated in millions.*	*System peak load in KW.*
Pykara	43,700	51·373	50,200
Moyar	36,500	21·599	..
Mettur	39,100	47·137	48,300
Papanasam	28,000	29·593	22,300
Madurai Thermal ..	8,500	10·653	..

The following services were connected during the quarter:—

	Agricultural.	*Industrial.*	*Domestic.*
Pykara System	142	21	1,297
Mettur System	113	6	73
Papanasam System ..	45	12	908

Hydro Generation Circle.—The fifth unit at Pykara power house and the first unit at Moyar power house were overhauled satisfactorily. The second winch rope at Pykara was renewed. Improvements to Pykara main flume channel to increase its capacity were progressing.

The first and third units at Mettur power house were overhauled. Erection of the temporary 110 KV. substation at Shenbagapudur was progressing.

Two 55,000 lb./hr. boilers were commissioned at the Madurai thermal station in March 1954.

Distribution—Pykara Electricity System.—Works relating to the temporary 66 KV. substations at Singanallur and Pollachi were completed and the stations were commissioned in February 1954.

Bulk supply was availed at 11 KV. at Fort Cochin direct from the Travancore-Cochin Government on 1st January 1954 instead of through Mattancheri licensee as hitherto.

Precommissioning tests were conducted on the 500 KW. diesel set hired to the Mangalore licensee and the set was commissioned into service.

Mettur Electricity System.—The total outturn of the Mettur Workshops during the quarter was of the value of Rs. 6·82 lakhs.

Supply to French India Government, Pondicherry, was discontinued on 2nd January 1954. Dismantling of the old Pondicherry 22 KV. line was completed.

Thermal System.

Madras Electricity System.—The station peak load, units generated and the system peak load were as follows :—

Name of station.	*Station peak load in KW.*	*Units generated in millions.*	*System peak load in KW.*
'A' Station	25,000	27·515	30,600
'B' Station	15,500	19·583	
'C' Station	2,400	0·264	

A total of 164 D.C. services were changed over to A.C. supply.

Twenty agricultural services, 50 industrial services and 734 domestic services were connected during the quarter.

To conserve the hydro storage till the onset of South-west monsoon, maximum possible relief was afforded to hydro stations by the Madras station during the off peak hours. Minimum necessary relief was availed by Madras from the hydro stations during the evening peak load hours.

About 17,000 consumers' accounts were mechanized to end of September 1953.

Technical Branch

Electrical.—The following were some of the more important works attended to during the quarter :—

1. Approval of the Inspector of Explosives was obtained for the layout of the oil service tanks at the Samayanallur power house.

2. Under the Pykara-Coimbatore-Madurai 110 KV. extensions, the layout of the combined control room, stores and office at Coimbatore switching station was finalized. Arrangement for control, relay and alarm panels at Madurai substation control room was finalised.

3. Specification for the Singarappet-Villupuram 110 KV. line and Singarappet-Vellore 66 KV. line was finalised and issued.

4. Tenders have been invited for the substation equipments in the Madras city and suburbs.

5. The specification for two 15 Megawatt sets and two 150,000 lb./hr. boilers under the Madras plant extensions III stage was finalised and kept ready.

6. Revised report on the Kundah hydro electric scheme was finalised and sent to the State Government, Central Water and Power Commission and the Planning Commission for sanction and inclusion in the First Five-Year Plan.

7. Data for further studies of the net-work analyser were being collected and completed.

Civil.—The following are some of the more important works attended to during the quarter:—

1. Under the Periyar hydro electric scheme calculations for discharges in the irrigation tunnel of the proposed cross sectional area were prepared for various levels in the Periyar lake and the effect of increased F.R.L. of forebay on the tunnel discharges was examined.

2. Construction of measuring weir across west Varahapallam in Nilgiris was completed. Construction of measuring weir across Upper Bhavani in the Nilgiris was nearing completion and the construction of the measuring weir across Punnapusha was continued. The work of installation of two D.R.G. rainfall stations proposed in Naduvattam basin was finished. At Palani the two current meter gauging stations at Thevankariar and Porandallar were completed in all respects.

3. Estimate for the detailed investigation of the Kumbar-Amaravathi hydro electric scheme was submitted to Government for administrative sanction.

The Government Electricity Department in 1952-53

(Abstracts from the Administration Report)

THE AGGREGATE of the power demands on the Government systems was 166,220 KW. and the units generated 795·447 millions against 166,275 KW. and 800·21 millions in the previous year. Details for the various systems are given below :—

Name of system.	*System demand in KW.*	*Generation in millions of units.*
I. Hydro-electric—		
Pykara ..	45,100	220·775 + 84·563 (Moyar)
Mettur ..	45,900	137·620
Papanasam ..	22,000	85·660 + 19·811 (Madurai thermal station)
II. Thermal—		
(a) Steam—		
Madras ..	30,200	152·170
Visakhapatnam ..	4,500	19·216
Vijayavada.	9,487	47·717
Nellore ..	1,225	7·736
(b) Diesel—		
Udipi ..	160	0·289
Other stations in the Andhra area.	2,986	5·310
III. Power purchased from Mysore and other sources—		
Ceded districts.	3,930	15·932
Hindupur, Kollegal and Fort Cochin.	497	1·592
Total ..	166,220	795·447

Figures for power generation in the State from all sources were as follows :—

Source of generation.	*Generation in millions of units.*
I. Government—	
Hydro-electric ..	528·618
Thermal, steam and diesel	249·305
Purchased from Mysore	17·524
II. Licensees	3·888
Total ..	799·335

It would be seen from the above that almost the entire power generation in the State was by the Department.

The total generation in the State decreased by about 0·8 per cent over the figure of 806·15 millions for 1951–52 due to the poor water conditions in the hydro-electric reservoirs caused by failure of the monsoons.

The power generated was utilised as under :—

Use.	*Percentage of power generated.*
Industrial supplies ..	57
Irrigation and agriculture.	13
Domestic heat, power, lights and fans	14
Commercial heat, power, lights and fans	9
Public lighting	3
Traction	3
Miscellaneous	1
Total ..	100

Load development.—The demand for power for industrial and agricultural purposes continues to be on the increase. In view of the paucity of funds, shortage of generating and transformer capacity, new supplies were confined to domestic agricultural and a few essential industries.

(1) *Financial results.*—The gross revenue earned by the Departmental undertakings in operation during 1952–53 was Rs. 516·76 lakhs as against Rs. 471·20 lakhs in 1951–52 registering an increase of about 9·7 per cent. Details of capital outlay, gross revenue, working expenses and net revenue of the systems are furnished hereunder :—

Name of Government system. (1)	*Year of operation.* (2)	*Total capital outlay.* (3) RUPEES IN LAKHS.	*Gross revenue.* (4) RUPEES IN LAKHS.	*Total working expenses.* (5) RUPEES IN LAKHS.	*Net revenue.* (6) RUPEES IN LAKHS.
I. Hydro electric schemes—					
Pykara	.. Twentieth ..	619·88	118·26	58·74	59·52
Mettur ..	.. Sixteenth ..	510·03	103·55	72·90	30·65
Papanasam	.. Ninth ..	547·12	54·52	37·09	17·43
II. Thermal—					
Madras ..	.. Sixth ..	483·59	155·12	132·21	22·91
Visakhapatnam	.. Fourteenth	91·45	18·23	19·00	— 0·77
Vijayawada	.. Do. ..				
Kurnool	.. Seventh ..				
Cuddapah ..	.. Fifth ..				
Anantapur	.. Fourth ..				
Sandur ..	.. Do. ..	346·53	54·12	57·55	3·43
Nellore ..	.. Third ..				
Proddatur ..	.. Second ..				
Nandyal ..	.. First ..				
Tadpatri ..	.. Do. ..				
III. Power from Mysore— Ceded districts and Hindupur	.. Fourth ..	97·92	12·96	9·05	2·91
	Total ..	2,696·52	516·76	386·54	130·22

The return on capital outlay in operating systems works out to 19·2 per cent gross and 4·8 per cent net.

The receipts from the Inspectorate amounted to Rs. 15·46 lakhs made up of Rs. 13·06 lakhs from the electricity duty, Rs. 1·32 lakhs from inspection under the Indian Electricity Act and Cinematograph Act, Rs. 0·94 lakh from penalty for excess consumption of electricity and Rs. 0·10 lakh from fees for audit of licensees accounts and Rs. 0·04 lakh from miscellaneous sources.

Number of consumers.—There were 379,205 consumers in the

State at the end of 1952-53 compared to 339,605 consumers at the end of 1951-52 of whom 372,604 consumers were in the areas served by power generated from Government undertakings, 192,141 in areas served directly by the Electricity Department and 180,463 in areas of licensees distributing Government power. The balance of consumers, namely, 6,601 were severed by self-generating licensees. Details are given below :—

Name of system.	Number of consumers. Served by the Electricity Department.	Served through distributing licensees in Government areas.
(1)	(2)*	(3)
Hydro electric—		
Pykara	47,388	26,518
Mettur	28,827	96,022
Papanasam	34,606	39,337
Thermal—		
Madras	47,708	1,244
Visakhapatnam	4,391	4,424
Vijayavada	5,805	12,923
Others	16,585	..
Power purchased from outside—		
Ceded districts	5,510	..
Hindupur and Kollegal	1,321	..
Total ..	192,141	180,463
Other licensees	6,601	
Total ..	379,205	

Supply was extended to 182 villages and towns by the Department and to 46 villages and towns by the licensees during the year. The total number of villages and townships having electric supply at the end of 1952-53 were 2,298 and 158 respectively. Of these 1,593 were served by the Electricity Department and the rest by licensees.

Transmission lines and sub-stations.—The route mileage of Government transmission and distribution net-work increased by 1,390 miles during the year. The total miles of high-tension and low-tension lines in each system at the end of the year are furnished hereunder :—

Name of system.	Number of route miles of lines. H.T.	L.T.	Total.
(1)	(2)	(3)	(4)
Pykara	1,940	2,335	4,275
Mettur	1,949	1,251	3,200
Papanasam	716	624	1,340
Madras	417	716	1,133
Andhra	1,167	693	1,860
Rayalaseema	499	351	850
Total ..	6,688	5,970	12,658

Details of E.H.T. and H.T. transformer stations are as below :—

System.	66 and 110 K.V. Number.	66 and 110 K.V. Capacity K.V.A.	22 and 33 K.V. Number.	22 and 33 K.V. Capacity K.V.A.
(1)	(2)	(3)	(4)	(5)
Pykara	10	84,250	3	2,753
Mettur	18	66,250	10	11,250
Papanasam	7	40,540	5	20,625
Madras	2	23,000	12	33,000
Andhra	..	..	18	12,200
Rayalaseema	4	6,500	6	5,800
Total ..	41	220,500	54	85,625

This does not include transformers in power houses.

Agricultural development.—Top priority was given as usual in the matter of supply to agricultural loads with a view to aid the grow more food campaign. During the year 2,445 agricultural pumpsets

were connected up by the Department and 516 by licensees. Details of agricultural services with their connected load in the different areas at the end of 1952-53 are given below :—

Name of the system.	*Number of services connected in 1952-53.*	*Connected load in KW.*	*Total number of services at the end of the year.*	*Total connected load in KW at the end of 1952-53.*
Pykara System	658	2,737	8,199	36,340
Mettur System	600	2,450	5,028	19,412
Papanasam System	383	1,217	2,049	6,545
Madras System	177	1,227	1,254	6,304
Andhra System	458	1,579	1,191	4,226
Rayalaseema System ..	169	761	277	1,200
Total ..	2,445	9,971	17,998	74,027
Licensees distributing Government power.	516	1,693	3,848	14,363
	2,961	11,664	21,846	88,390

Rural welfare schemes (southern area).—A large number of schemes (24 schemes) costing over Rs. 18·82 lakhs have been sanctioned in the year under the Firka Development Scheme for supplying power for agricultural, industrial and domestic purposes covering 35 villages in Tirumangalam, Pannikundu, Sankarankoil, Pazhamoottai, Turinjapuram, Kalasapakkam, Tiruppur and Avanashi firkas. Over 720 wells with a connected load of over 3,800 h.p. and a number of domestic lighting services will be connected up under these schemes.

Construction activities.—Construction works connected with the Five-Year Plan of power development in the State (excepting distribution of power) were in full swing and a total capital expenditure of Rs. 4·69 crores was incurred on major projects and transmission lines. One of the major projects included in the Five-Year Plan, viz., the Moyar Hydro-electric Scheme, commenced operation.

New schemes sanctioned.—The Coimbatore - Madukarai - Palghat - Shoranur 110 KV extensions estimated at Rs. 77·0 lakhs initially, rising to Rs. 79·8 lakhs in ten years was the only major scheme sanctioned during the year.

Electrical Inspectorate and licensees.—The number of licensees' undertakings at the close of the year was 43 of which 1 was operating under section 28 of the Indian Electricity Act and 9 managed by

local bodies and the rest by private licensees. No new licences or extension of period or area of existing licences were sanctioned. The sanction given under section 28 of the Indian Electricity Act to Messrs. Kanara Ceramics, Limited, for distribution in the area of Kasaragod was extended up to 31st March 1953.

In view of the difficult financial position no loans were given to licensees for rural development. Permission was granted under section 9 (2) of the Indian Electricity Act to the West Coast and Guntur licensees to take mortgage loans of Rs. 7 and Rs. 4 lakhs respectively from the Madras Industrial Investment Corporation. The accounts of 45 licensees were audited by the Audit Officer.

There were at the end of the year 1,124 cinemas out of which 571 were permanent and 553 were temporary.

The total number of accidents during the year including those on lines owned and operated by Government was 234 of which 112 were fatal.

[*Abstract by R. Rajappan.*]

Electricity Supply in India, 1952

[*Extracts from " Public Electric Supply All-India Statistics,* 1952 *" issued by Government of India, Ministry of Irrigation and Power, C.W.P.C. Power Wing*).]

1. *Authorised undertakings with own generating*—

State-owned	204
Companies	220
Total ..	424

2. *Authorised undertakings receiving bulk supply*—

State owned	99
Companies	92
Total ..	191

3. *Generating capacity (KW)*—

Steam Plant ..	1,176,317
Oil Plant	170,259
Hydro Plant	715,179
Total ..	2,061,755

4. *Output (Million KWH)*—

Steam Plant	3,102·416
Oil Plant	218·801
Hydro Plant ..	2,799·130
Total ..	6,120·347

5. *Consumers*—

Lighting and Heating.	1,740,700
Industrial Power (including Traction and Water Works).	74,063
Irrigation	28,710
Total ..	1,843,473

	KW.
New Plant Installations in 1952	228,505
Generating capacity removed from service	2,176

6. *Number of Generating Stations*—

Hydro Plant	41
Steam Plant	90
Diesel Plant	405

	KW.
7. Maximum Demand on Power Systems (about 64 per cent of the total plant capacity).	1,310,651

8. *Average output, Load factor and Plant demand factor*—

Type of power plant.	*KWH generated.*	*Aggregate of maximum demand of individual generating systems.*	*KWH generated per KW of average plant capacity.**
	MILLIONS.	KW.	KW.
Steam	3,102,416	675,646	2,637
Oil	218·801	72,018	1,285
Hydro	2,799·130	562,987	3,914
Total ..	6,120·347	1,310,651	2,969

* That is, the equivalent number of hours during which plants were run on an average, at the full-rated capacity.

9. *Frequency*—

Power generated at the standard 50 cycle frequency.—96·8 per cent.

The rest of 3·2 per cent comprise of generation at Burdwan town at 50 and 60 cycles, in Baroda City at 40 and 50 cycles, in Mohora (Kashmir) at 25 cycles, and in Mysore at 25 and 50 cycles.

A general change-over to the stand 50 cycles frequency is continuing in these areas.

10. *Maximum Transmission Voltages*—

In the Punjab Grid it is 132 KV. and in Madras, Mysore and in Tata Systems, it is 110 KV.

11. *Power Transformers*—

Number	1,300
	KVA.
Capacity	3,026,000

12. *Distribution Transformers*—

Number	13,283
	KVA.
Capacity	1,083,184

13. *Energy Sales by Class of Utilisation—*

Serial number and Class of Utilisation.	*KWH sold (Millions) 1952.*	*Percentage of total sales in 1952.*
1 Domestic or Residential Light and Small Power.	628·882	12·6
2 Commercial Light and Small Power.	336·628	6·7
3 Industrial Power	3,206·524	64·0
4 Traction	324·730	6·5
5 Public Lighting	73·942	1·5
6 Irrigation	215·192	4·3
7 Water Works	219·764	4·4
Total ..	5,005·682	100·0

14. *Annual Per Capita Consumption of Electricity.*—The average per capita consumption of electricity for the Indian Union was 13·83 Kwh (corresponding to 16·92 Kwh of per capita energy production) as compared with 13·25 Kwh for the previous year. If the generation in plants of industrial establishment and railway is also taken into account the consumption and production of electricity per capita for the year would be 19·3 and 22 Kwh respectively.

15. *Annual per Capita Consumption of Electricity—*

Serial number and State or States Union.	*Total per capita KWH.*
1 Assam	0·65
2 Bengal (West) * ..	46·10
3 Bihar	3·31
4 Bombay..	43·01
5 Centrally Administered Areas—	
(a) Delhi	70·86
(b) Rest	1·63
6 Hyderabad	2·19
7 Jammu and Kashmir ..	3·89
8 Madhya Bharat ..	3·24
9 Madhya Pradesh ..	3·69
10 Madras	10·85
11 Mysore	45·60
12 Orissa	0·41
13 Pepsu	3·76
14 Punjab (I)	8·12
15 Rajasthan	3·11
16 Saurashtra	8·75
17 Travancore-Cochin ..	16·21
18 Uttar Pradesh	7·67
Total ..	13·83

* Includes Chandarnagore.

[*Extract by U.S. Bhat, Assistant Engineer.*]

Madras Leads

Of all the Indian States, Madras has the largest length of High Tension lines, 9,160 circuit miles. Uttar Pradesh and Bombay, come next with 5,834 and 2,671 circuit miles respectively.

Madras has the largest number of distribution transformers, 3,668 with an aggregate capacity of 247,407 KVA. Uttar Pradesh and Mysore come next with 3,274 and 1,700 distribution transformers.

Madras has the largest number of agricultural consumers, 20,929, with a total connected load of 86,174 KW. Mysore and Bombay come next with 4,061 and 1,051 consumers respectively.

Madras has the largest number of consumers for public lighting (street lighting) 1,423, while Travancore-Cochin and Bombay come next with 212 and 201 such consumers respectively.

[*Extract by U.S. Bhat, Assistant Engineer.*]

Electric Power in Mysore

(*Extracts from Chief Minister Sri K. Hanumanthayya's speech at the Twenty-third annual meeting of the Research Committee of the Central Board of Irrigation and Power at Bangalore on 15th June* 1953.)

IN THE FIELD of Power production in India, Mysore was the first to instal a Hydro-electric power plant at Shivasamudram in 1902. I am told that this is also the first Power Plant installed in Asia. To start with, it generated only 4,500 KW. of electric power. We have now three stations Shivasamudram, Shimsha and Jog with an installed capacity of 179,200 KW. Our needs—industrial, agricultural and domestic—have been continuously outstriping our increased power production. May be, no amount of power is too much for man! We are, therefore, put to the necessity of planning for still greater production of power. Nature has blessed us with valleys and river points still untapped. It is estimated that only about 26 per cent of the available sources of power production in the State has so far been utilised. The Sharavathi river and valley, in which Mahatma Gandhi Hydro-electric works are situated, are now capable of giving us 120,000 KW. the largest block of power in the State. It is possible to increase this power production by three times by constructing a dam across Sharavathi river at Honnemaradu. This expansion is estimated to cost about Rs. 30 *crores*. The river Cauvery at Mekadatu in Bangalore district, if harnessed, is capable of giving us

40,000 KW. and the project may cost about Rs. 4 *crores*. The expansion scheme in the Shimsha valley can give us 45,000 KW. of power and it is estimated to cost about Rs. 7 *crores*. These schemes have to be finalised and included at least in the second Five-Year Plan. Requests for supply of electric power are not only increasing within the State, but also from outside the State. We have met the outside demand to some extent, and we are taking steps to supply power to the Coorg and South Canara districts in the near future.

—"*Irrigation and Power*"
October 1953.

Extract from Speech of Shri Kanwar Sain, President, Central Board of Irrigation and Power

CHEAP ELECTRIC power is essential for the development of a country. Consumption of electricity per capita is taken as a yard-stick of the material development of a country and the standard of living of its people. India's resources for Hydro-electric power are vast. The development so far is only of the order of ½ million KW. out of a potential of 40 million KWs.

The projects included in the Five-Year Plan are expected to cost Rs. 765 *crores*. It is a big sum for a poor country like ours. It is for us, Engineers and Research Workers, to see that these projects are completed as economically as possible. We must make every Rupee go to the farthest limit that it can to achieve the results, and it is in this direction, that the researches carried out in the Irrigation and Power Research Stations in India must play a very important part.

While valuable work has been carried out in many directions it will be noticed that practically little research has been done on the hydel side, though some very valuable papers have been contributed by our Electrical Engineers of various problems. It is gratifying to note that the Institute of Science, Bangalore, has added the Power Engineering Department also. This is a step in the right direction. You have this morning witnessed the opening of the new building of the Civil and Hydraulic Engineering Laboratory of the Power Engineering Department. This Laboratory which is expected to start functioning by the end of the year will comprise of the Hydraulic Machines Laboratory, the Material Testing Laboratory, the Soil Mechanics and Concrete Laboratory and the Structures and Vibration Laboratory. In this Laboratory it will be possible

to carry out tests with models of turbines, valves, scroll cases, and draft tubes. The Institute provides unique facilities for taking up investigations on power development projects. Here we have facilities to make models of complete projects and test the efficiency of working of the various parts individually and in relation to the whole scheme including intakes and penstocks. The tests will not be confined to testing the efficiency of individual parts only. The high voltage laboratory—perhaps the only one of its kind in this part of the world for meeting the needs of heavy electric machines—has also been installed.

A net work analyser has been installed in the institute for solving problems of power distribution. There is wide scope for economies in our power undertakings through research in the field of transmission and distribution as the transmission and distribution costs constitute about 50 per cent of the entire capital outlay in a power system.

The large multiple purpose projects have been phased with a view to early completion of their irrigation aspects. A sum of Rs. 190 *crores* has been spent up to March 1953 out of a total provision of Rs. 518 *crores* for the five-year period. In terms of expenditure incurred, therefore, the progress in the implementation of the plan has been satisfactory. In terms of benefits although the full quantum will be achieved only on completion of works, perhaps a little later on full development, it is satisfactory to note that the targets fixed for the year 1952–53 have been substantially attained. Against the anticipated installed power of 239,000 KW. by 1952–53; 315,000 KW. have actually been installed. This includes 50,000 KW. at the Bokharo Thermal Station of the Damodar Valley Corporation. Under Irrigation the target was 1·8 million acres of irrigated acreage for the year 1952–53. Against this more than 1·5 million acres have actually been irrigated. These are by no means small achievements on the part of Engineers.

—"*Irrigation and Power*"
October 1953.

Technical Press

Electricity Supply in U.S. America, 1953

Number of consumers ..	49·9 m.
Electricity production ..	442,014 m. Kwhr.
Electricity sales	382,500 m. Kwhr.
Revenue	6,779 m. dollars.
Capacity	90·9 m. Kw.
Capacity added in the year.	8·67 m. Kw.
Total assets of class A & B electric utilities.	27,100 m. dollars.
Fuel consumption per unit generated.	1·07 pounds of coal per Kwhr.
Employees	246,700.

Of the total power capacity of the State, the Power Companies own 77·7 per cent, Federal Agencies 12·4 per cent, Municipal, State and Power District Systems 9·3 per cent and Co-operatives 0·6 per cent.

Of the electricity consumers in the State, Power Companies serve 79·4 per cent, Municipal, State and Power District Systems 12·6 per cent and Co-operatives 8 per cent. The Federal Agencies do only bulk supply.

Transmission and distribution line constructions show a tendency to taper off. On the other hand sub-station constructions are mounting up year after year. In 1953, 16,245 miles of 22 K.V. and higher voltage lines were put in. Also 149,200 miles of H.T. and L.T. distribution lines were erected. 28,154,000 KVA. capacity of new sub-stations were constructed.

Of the consumers, 84·1 per cent are domestic, 3·3 per cent rural, 11·8 per cent small light and power, 0·6 per cent large light and power.

In the sale of electricity, 25·3 per cent were taken up by residential consumers, 2·5 per cent by rural consumers, 17·8 per cent by small light and power, 49·6 per cent by large light and power, 0·9 per cent for street lighting, 2·3 per cent by other public authorities and 1·3 per cent by electric traction.

The average consumption of a domestic consumer was 2,350 kwhr at an average cost of 2·75 cents. The corresponding figures for small light and power consumers were 11,875 kwhr and 2·55 cents.

Out of the total revenue from sale of energy—the residential consumers contributed 39·2 per cent, rural consumers 3 per cent, small light and power 25·7 per cent, large light and power 27·7 per cent, street lighting 1·7 per cent, other public authorities 1·9 per cent and traction 0·8 per cent.

Out of the revenue received, 16·8 per cent went for rural, 19 per cent to salaries and wages, 10·3 per cent to maintenance and other operating expenses, 9·1 per cent to depreciation, 5·5 per cent to fixed charges, 22 per cent to taxes and 17·3 per cent to dividends and surplus. Taxes

continued to be the largest expense in the income statement. In 1953 the taxes reached 1,338 million dollars.

The reserve for depreciation as a percentage of the value of plant stood at 19·6 per cent. The long-term debts as a percentage of the net utility plant value stood at 52·2 per cent. The yield in investments in Electric Supply Companies ranged between 3·07 and 3·64 per cent on bonds, 4·16 per cent to 4·88 per cent on preferred stocks and 4·95 per cent to 6·1 per cent on common stocks.

Policy.—The Eisenhower Administration is not in favour of the commencement of new schemes by the Federal Government. Projects to be constructed by Federal Government may include those which because of size and complexity are beyond the means of local, public or private enterprise. The Department of Interior will construct and operate transmission lines which are economically feasible where the necessary facilities are not being provided on reasonable terms by other public or private agencies.

Comparison with Britain.—Since nationalization of the power industry in 1948, Britain's residential consumer has had to pay approximately 10 per cent more for the electric supply service while in the United State of America there was a decline of nearly 7 per cent in the price per kwhr. In a similar period, the commercial consumer in Britain had to pay an increase of 3·2 per cent, while in the United States of America there was a reduction of 4·5 per cent from the 1948 level. In the case of the industrial consumers, the 1948 average price per kwhr sold was 46·7 per cent over the 1937–38 level in Britain. By 1952–53 it had further increased by 14·8 per cent. In the United States of America the price declined by one per cent over this period. In 1951 the consumption of the United States residential consumers was 1,910 kwhr. per annum compared to 1,350 kwhr. in Britain. In 1952 the consumption in United States, went up to 2,069 kwhr. while that of Britain was 1,326 kwhr.

Canadian Electrical Supply.—Canada generated 58,700 million kwhr. for primary consumption, 3,900 million kwhr for secondary consumption and 2,400 million kwhr for export to United States in 1953. The consumers served were 3·5 million, 85 per cent of whom were domestic. About 57 per cent of the output went for manufacture and 14 per cent to domestic users.

Abstracted from "*Electrical World*", January 25, 1954.

The Engineer and His Profession

In the short span of years from 1935 to 1950, industry brought us, among other things: radar and television, nylon and other synthetic fibres, the continuous-flow chemical plant, the diesel-electric and gas-turbine-electric locomotives, silicones and synthetic rubber, penicillin and anti-biotics, cortisone, the jet engine, magnesium and titanium for structural use, the electronically controlled automatic machine tool, the fork truck, the electronic computer, the germanium diode and the transistor, and nuclear power. Some of these had been

discovered or were in some stage of existence before 1935; nevertheless they were brought into widespread application in the short period of those 15 years.

In parallel with all of these contributions were the continual improvements in those products which we had before 1935; the automobile, the railroad, the air-plane, the telephone and radio, home appliances, lamps and lighting, the highways and bridges and buildings and houses, the vast electric power systems, electronics, plastics and chemicals, metallurgy, instruments for measurement and control, health systems, the distribution of foods and improvements in materials of every kind.

All of these new and improved products were the result of untiring research by scientists and of bold development, design, application, operation, construction and management by engineers.

The vastness and multiplicity and complexity of these operations in industry are made possible by the engineer and his associates. With his zeal to go forward, the engineer opens new doors. His opportunity for service is his open sesame to achievement. And in American industry today this is as great as the power of industry itself.

This opportunity has given to the engineering profession the highest mark of service. For the products the engineer has made available have given humanity the opportunity for a fuller life and made it eager for more.

Even though people do not spontaneously recognize him in his products, the engineer still has the urge to provide more new products and to improve present ones. Of science and engineering there is no end. Neither is there any end to the opportunities for the engineer or the need for his contributions.

—"*General Electric Review*"
September 1953.

Hydro Power : Key to Japan's Economy

Japan's hydro-electric power potential is estimated at approximately 20 million kw, but only 6·8 million kw or about one third of the potential has been developed so far. Further more, only one-third to one-half of the developed capacity actually can be generated in dry seasons and winters. Thermal power is used largely to supplement this seasonal decline of hydro power. This is particularly true in the eastern half of the country.

At present, there are 1,420 hydro electric power plants with the combined capacity of 6,829,000 kw representing 62·7 per cent of total electric power capacity and 276 thermal plants with a combined capacity of 4,096,000 kw representing 37·3 per cent of the total. Japan has the fourth largest power capacity, with the United State, Britain and France in first, second and third places.

Most of these power plants—1,264 hydro plants and 85 thermal—are owned by nine electric power companies.

Supply of electric power in December 1952 was 5,670,000 kw while its unrestricted demand was estimated at 7·8 million kw and is

expected to reach 10,170,000 kw in five years.

To fill this gap, the Government recently has made up a tentative plan calling for the development of 5,460,000 kw (3,980,000 kw of hydro and 1,480,000 kw of thermal). To push this plan, the semi-Governmental Electric Power Development Company, was established recently under the Power Development Promotion Law which was promulgated on July 30, 1952.

Costs spread.—The development plan requires the fund of 824 billion yen in six years from 1952. Of this total, 661,140 million yen is to be borne by the nine power companies, 124 billion yen by the development company, 38,265 million yen by ten prefectural Governments concerned and 29,350 million yen by private firms.

As of mid 1953, 48 dams and power stations were being constructed by the nine power companies, 14 by the development company, 13 by ten prefectural Governments and the same number by 11 private industrial firms. Many more are under study.

—"*Electrical World*"
October 26, 1953.

Nylon Safety Straps Win out in Tests

Lineman safety straps of fibrous 2-ply nylon were superior to cotton or leather in tests made by Pacific Gas & Electric Co. Several types of nylon straps were subjected to the tests. These showed that the strap coatings and the method of cementing the ply were important factors for durability and strength under various circumstances of service.

The test results on the best type of strap are described below.

Tensile strength test.—This test was made by looping the strap around a six inch pulley, simulating a line pole. Load was applied until failure occurred.

Additional tension tests were made with buckles instead of steel snaps. Failure at the buckle hole occurred at 655 lb. as compared to 3,090 lb. for straps with steel snaps. The steel snaps utilize the full strength of the strap.

Abrasion resistance test.—For this test, a special wear test machine dragged an emery wheel across a sample piece of belt 30,000 times. Resistance to abrasion was measured by comparative depths of wear on various sample pieces.

Preservative resistance test.—To determine the effect of creosote and pentachloraphenol on nylon, samples were soaked in each preservative for 24 hours and then exposed to sun and air for three months. These tests showed that the preservatives had very little influence because the samples retained a minimum of 95·3 per cent of the strength of those not soaked in the preservatives.

Influence of preservatives on the neoprene cement of the ply was determined by ply-separation tests. The sample most affected retained 66·6 per cent of the strength of an unsoaked samples.

Temperature test.—The influence of temperatures that might be encountered in normal use was not

significant. A temperature of 110°F actually increased the strength over that at room temperature by 7·8 per cent. The low temperature of 20° F decreased the strength only 1·9 per cent.

Sulphuric acid fume test.—Exposure to fumes of sulphuric acid for 24 hours had practically no influence on the strength of nylon samples.

Falling man test.—A 212 lb. weight attached to the lineman safety strap was caused to drop 6½ feet where the strap was stopped by the steel angle members of a test structure. This procedure was designed to exceed the worst condition which might occur in practice. The maximum tear on nylon strap was half-an inch at the buckle hole. Straps of other materials failed completely when subjected to this test.

—" *Electrical World* "
October 1953.

Electric Incandescent Lamp Industry

The number of lamp factories in India now is 13 of which 11 factories are actually producing lamps and other two are expected to commence production soon. Of the 11 producing units one is a combine of purely foreign interests and the rest are purely Indian concerns. The two companies who have not yet commenced manufacture are also Indian.

The Bengal Electric Lamp Works, Limited is one of the biggest Indian factories producing electric lamps. It was started only in 1932 and during its short span of life the output was multiplied 100 times. From 200 experimental lamps per day its production increased to about 20,000 standard quality lamps per day and the number of employees grew from one dozen to nearly 700 including a team of highly trained engineers. The Company has its factory housed in its own spacious buildings at Jadavpur, a southern Suburb of Calcutta. The Company has been paying dividends continuously since 1938. The present requirement of India, of types of lamps that are mainly being made here is hardly over 18 millions a year. But the installed capacity is more than 37 millions. The total capital involved approximately represents Rupees two crores. The industry gives employment to more than 2,500 people.

—" *Indian Electrical Contractor and Trader* "
December 1953.

Electricite De France Offers Electric Dividends

A new type of loan was floated in October by Electricite de France, the nationalized electricity authority, offering subscribers of the debentures a dividend pegged to the selling price of power.

Actually the purchaser buys what is called a "production share". Priced at 16,000 francs, these entitle the holder to an annual return on the debentures equal to the average annual selling price of 100 kwhrs. There is a guaranteed minimum annual payment of 720 francs.

The debentures have a life of 15 years. They can be redeemed

any time after July 15, 1958 either at the option of the holder or by the drawing of lots by Electricite de France.

In the latter case the payment is to be equal to 20 times the value of 100 kwhr due in the year of the drawing. The minimum payment is to be 16,000 francs.

If the debentures are redeemed by the holder, the payment will be the 16,000 francs which is the original price paid.

—"*Electrical World*"
November 1952.

T.V.A.'s New Microwave Facilities

First link of Tennessee Valley Authority's new microwave radio facilities is now in service. The new channel connects T.V.A.'s power division headquarters in Chattanooga with Wilson Dam, Ala. Two other links connecting Chattanooga with Nashville, and Wilson Dam with Jackson, Tenn., will go into service shortly, augmenting the authority's private communications system by 353 miles of microwave channels at an estimated cost of 705,000$ for the three new links. Each of the new links initially will carry five telephone circuits and one teletype circuit, with an ultimate capacity of 22 telephone and 19 teletype or telemetering circuits.

—"*Electrical World*"
October 1953.

Introduction of Electric Cremation in India

The conventional method of cremation in India on piles of wood in the open air is objected to even by certain Indian authorities on hygienic grounds. The Corporation of Calcutta has therefore, made careful investigations as to how far conventional European incineration practice could be reconciled with Hindu ritual. As a result of this preliminary study a Brown Boveri 54 KW cremation furnace has now been ordered for the Calcutta Crematorium in which corpses can be incinerated absolutely smokelessly and inodorously. Cremation takes about one hour. The full rated input of 54 KW is only required to heat up the cold furnace; during the cremation process proper electrical energy is cut off. The corpses are thus incinerated by the accumulated heat with a supply of fresh air. For subsequent incinerations the furnace is still heated to such an extent-partly through the heat released by the combustion of the corpses that further heating of the resistance elements embedded in the refractory lining is unnecessary. The furnace to be supplied to Calcutta will be the forty-second that Brown Boveri have built on the same principle.

—"*The Brown Boveri Review*"
July 1953.

The Annual Consumption and Cost of Electricity in the United States in 1951

In 1951—the latest year for which statistics are available—American consumers in homes and flats consumed 24 per cent of a total of 318·16 billion kilowatt-hours consumed throughout the United States for all purposes. They paid an average of 3 cents (about As. 2½) per kilowatt-hour of electrical energy.

Farmers and other rural dwellers paid a concessional rate of 2½ cents (about As. 2) per unit and consumed about 2·5 per cent of total power sales.

Large consumers of power, such as factories and other business concerns, including public services, have the lowest rate. In 1951 they paid only about 1½ cents per unit of electricity, and consumed 73·5 per cent of all power used in the United States in that year.

—"*American Reporter*"
February 3, 1954.

Rural Electrification Finance—Its Practice Abroad

By R. L. BUTAIL.

New Zeland.—Generation of power is in the hands of State Hydro-electric Department, which sells energy in bulk to electric supply authorities for distribution within their area of supply.

The Dominion Government enacted a special legislation in 1945 to deal with the question of rural electrification and thereby established the Rural Electrical Reticulation Council.

It is considered that 15 per cent of the cost of line extension supplying a group of consumers is sufficient to cover all charges for interest, depreciation, sinking fund, maintenance and cost of power. In sparsely populated areas where the consumers cannot guarantee minimum annual revenue equal to 15 per cent on capital cost involved in connecting them to the supply line, as referred to above, a procedure has been evolved for grant of subsidies to an extent of 7½ per cent of the capital cost of the line extension. This, in other words, means that the consumer is obliged to pay only half of the revenue required under the above minimum guarantee. The claim for grant of subsidy, however, has to be renewed every year in accordance with the actual revenue obtained from a particular extension and the shortfall in the minimum annual guarantee. The subsidy is permissible for a maximum period of 15 years.

United States of America.—The Government of United States has constituted the Rural Electrification Administration (R.E.A.) under the Department of Agriculture.

The R.E.A. makes long term (Payable over a maximum period of 35 years) low interest (two per cent per annum) loans to enable rural people to build electric lines and, where necessary to build and operate electric generating plants, and advises its borrowers on engineering, management, operating and legal problems. In areas where consumers have difficulty in financing their purchase of electric appliances and equipment, a special loan programme under which the R.E.A. lend money to the power supplier who in turn relend it to consumers for the purpose of financing the purchase of appliances and equipments, is available.

Ireland.—After examining the problem of rural electrification the Electricity Supply Board submitted a report thereon to the Government in 1943. Following principles were

subsequently adopted for solution of the problem :—

1. that, the rates of charge to the rural consumers should be at the same level as the existing tariffs for supply to villages. The same tariff applying to all rural areas throughout the country;

2. that, in general, consumers should not be asked to pay a capital contribution towards making supply available or to guarantee a minimum revenue;

3. that, supply should be made available to the maximum number of consumers and development should be planned on an 'area' basis as opposed to 'ribbon' development;

4. that, areas showing the highest estimated financial return on the capital cost of distribution should be developed first;

5. that, every effort should be made to complete the erection of the distribution networks in 10 years.

In order to make it possible to extend distribution networks throughout the whole country the Government agreed to pay a capital subsidy of 50 per cent of the cost.

To keep the cost of distribution to a minimum, no staff is located in the area, but is available from nearby towns. Consumers are further instructed to read their meters and post the readings on a prepaid post card once every two months and remit the amount due by postal order or cheque. Check readings are taken by the undertaking's employee once every 12 months only.

In working of the above scheme during the four years ending March 31, 1950, 7,310 kilometers of lines had been laid and 25,253 consumers connected.

—Extracts from "*Irrigation and Power.*" October 1953.

Wide Latitude Insulation Shown in Survey

From time to time power company engineers put this kind of question to us: "You people see a lot of line jobs—how many insulators are customarily used at 132 KV?" The voltage may differ, but the question is fairly common. Sometimes such a man is a little provoked when we give him an indefinite reply or put so much latitude into our answer that it becomes useless in his estimation. Doesn't O-B know such a simple part of its business;

Recently a comprehensive report was issued by a joint AIEE-EEI Committee in which a study of line outages has been conducted. In this report is a table entitled, "Range of Total Insulator Spacings for Each Voltage Class." Data in the table was taken from 33,796 miles of transmission line which, obviously is highly representative. Here is the tabulation :

Voltage Class (KV)	*Total Insulator Spacing (inches).*
100–125	28·5–74·8
126–150	40–86·4
151–175	46–104
200–250	69·2–105
Above 250	120

From these figures it will be seen that no specific relation exists between voltage and insulator string length. Length in inches has been chosen to express the amount of insulation because units can vary from the close-coupled suspension disc of 5-inch section to the special heavy duty and fog types that may exceed 6½ inches. Defining strings in terms of units would be misleading, but one can easily divide his own standard unit into the length shown in the table.

It has been our observation that newer lines, in general, are more heavily insulated. The science of lightning-resistant design that makes possible the close prediction of outages in a given storm territory is a development of the last two decades. It usually involves higher impulse insulation strengths than were formerly employed. Often more insulation is cheaper than the cost of reducing structure footing resistance by any of the accepted methods now in use.

Economics should govern the answer. There is usually a wide choice between spending money on grounding, extra roads, counterpoise, or insulation. A wise conclusion in this connection can be made only by the individual engineering department, and it has a considerable influence on the number of insulating units employed.

Another late development relates to local contamination conditions such as salt atmosphere and wind-borne deposits. In cases such as this, insulation several hundred per cent above average voltage requirements is often cheaper than frequent trouble or costly remedial measures.

At any rate, when we are asked, "How many insulators should I use at a given voltage?" the answer is still, "We don't exactly know." The tabulated information presented here does the best job we have seen so far in defining upper and lower limits, but they are far apart. The engineer, with intimate knowledge of his operating problems and also his budget, is the only man who can bring the many factors into proper balance and come up with a specific answer.

—"*Hi-Tension News*"
March 1954.

Tubewell Scheme Uttar Pradesh

The State Tubewells Scheme was inaugurated in the Uttar Pradesh State in 1934-35 and the older Tube wells have now run between 15 and 18 years. Interesting data on their operation are available for study.

It was originally hoped that the Standard 6-inch size Tubewell will run an average 50,000 pumping hours, and, based on an annual 3,000 hours, it was thought to have a 17 year's life. This interval of time has shown that estimate quite conservative and on the safe side. The Tubewells have outlived the allotted performance by a wide margin and many are going strong after crossing the *one lakh* pumping hours' mark. In the western districts, particularly Meerut, Muzafarnagar and Bulandshahr, they

have run an average 5,600 hours yearly. The incidence of failure after running 50,000 hours is actually very much less for those earlier wells. The average span of life for "Failed Wells" has exceeded 75,000 pumping hours and not a few did close on *one lakh* hours. Their failure was found to have been caused by (1) either excessive discharge of sand or (2) steady decline in yield leading, over a period of time, to uneconomical pumping.

—"*Irrigation and Power*"
October 1953.

Technical Tit-bits

Federal Power.—Approximately 14 per cent of the central station electric generating capacity in the United States is federally owned.

—"*Combustion*"
October 1953.

T.V.A. now has Eleven Steam Plants which produce nearly half its total output.

—"*Combustion*"
October 1953.

Taxes in U.S.A.—On the average, of every dollar paid by the consumer for electricity over 23 cents goes into the payment of local, state and federal taxes.

—"*Combustion*"
October 1953.

Power by Wireless.—It is reported that experiments in sending electricity over long distances without wires have been successfully conducted by scientists in Italy.

—"*British Electricity*"
November 1953.

Accident Frequency in utility systems not making the use of rubber gloves mandatory has been 23 times as high as on systems that have a hard and fast rule.

—"*Electrical World*"
November 1952.

Pykara Hydro Power.—One cusec of water from the Pykara forebay develops 200 KW at the Singara station and 80 KW at the Moyar station and is then used for irrigation purposes.

—"*Glenefield Gazette*"
December 1953.

Ground resistances are lower with eight-foot rods than with 20 feet rods if checkmeasured immediately after driving. However measured after 30 days, when soil has had time to pack around the rod for good contact, resistances are lower with the 20 feet rods.

—"*Electrical World*"
October 1953.

Field Testing of Generator Insulation is now in its third year. Some 10 million kva of machines in all kinds of plants—both public utility and industrial and in all parts of the United States have been so checked. The merits of periodic testing of machines in service are being rapidly accepted in industry.

—"*Westinghouse Engineering Highlights*", January 1953.

Aluminium in dry-type power transformers.—The electrical performances of aluminium and copper transformers are identical. In dry-type transformers, aluminium windings weigh about half as much as copper. The iron is from seven to ten per cent more. Overall weight is from two to five per cent less.

Aluminium appears to have more justification in dry-type than in oil-filled transformers. This is because a dry-type transformer has relatively large insulation clearances and the increase in conductor sizes has less effect on the overall size than when oil is used for transformer insulation.

—" *Westinghouse Engineering Highlights* " January 1953.

M.I.T.—A Leading United States Engineering University.—To-day the four main schools of the Institute—the Schools of Science, Engineering and Architecture and the Graduate School and its 1,171 professors offer MIT's 4,874 students instruction in more than 900 subjects.

MIT's library, one of the most comprehensive scientific collections in the United States, contains approximately 450,000 volumes. The library subscribes to 2,500 periodicals in addition to some 2,000 special reports and annual reviews which serve the students as reference books and research material.

—" *Engineering news of India* " June 1953.

Thermal efficiencies.—In his inspiring presidential address to the recent British Electrical Power Convention, Sir John Hacking, M.I.E.E. pointed out that the average thermal efficiency of the British Electricity Authority's stations is now about 22·5 per cent, whilst the best stations are operating at between 29 per cent and 31 per cent. It is expected that the average thermal efficiency will be raised to 26 per cent and the highest to between 33 per cent and 38 per cent by the year 1960. An efficiency of 37·5 per cent has already been achieved with steam plant in the United States of America. The average thermal efficiency for the United Kingdom is given as 21·5 per cent for 1950 and 24·5 per cent for 1956, the corresponding figures for the United States being 23·4 per cent and 26 per cent respectively.

—" *British Electricity* " August 1953.

Britain hopes to generate all the country's electricity by atomic power within 20 years, the Government announced. " Extensive studies ", a white paper said, " have convinced scientists and engineers that nuclear energy should be able to make a substantial contribution to the electricity supply of the country at a cost comparable with the cost of coal-generated electricity ".

—" *Electrical World* " January 1954.

Transformer Noise arises from magnetostriction, resonant components, vibrations at core gaps and joints, vibrations caused by interaction between core and coils and also vibration of the coil conductors carrying current.

—" *Electrical World* " January 1954.

Siemens (Germany) submitted the first project report for establishment of a heavy electrical equipment factory. The project involves a capital outlay of about 84 million and is planned to meet almost all India's requirements in this sphere.

—"*Electrical World*"
February 15, 1954.

Cost of maintaining an operably clean boiler has been reduced from 7·3 cents per barrel of fuel oil without additives to 0·78 cents when adding dolomite in amounts about equal to the ash content.

—"*Electrical World*"
February 15, 1954.

Aluminium in contact with any other metal in an electrical connection is almost sure to lead to trouble if a liquid electrolyte is present in the joint. Degree of corrosion depends on the strength of the electrolyte, relative positions in the galvanic series and duration of the exposure.

Vaselines highly refined tend to dissolve Neoprene sheath materials and the adhesive coatings of tapes. They should be used with care to seal aluminium to copper connections on covered wire.

—"*Electrical World*"
December 14, 1953.

India has the third largest telegraph channel mileage in the World with 244,931 miles of cables and overhead wires and the sixth largest telegraphic traffic with an average of 24·5 million telegrams a year.

—"*Hindu.*"

Social and Personal

SRI P. A. Krishnan was appointed as Superintending Engineer, and posted as Superintending Engineer, Pykara Electricity System, *vice* Sri K. M. Kuruvilla who proceeded on leave for four months from 24th May 1954, *a.n.*

On return from leave, Sri N. R. Narasimhamurthy was posted as Chief Operation Engineer (North), *vice* Sri A. R. Narayana Rao who was posted as Superintending Engineer (Distribution), Madras Electricity System on 17th June 1954, *a.n.*, *vice* Sri S. N. Ramachandra Rao.

On relief, Sri S. N. Ramachandra Rao was posted as Superintending Engineer, Pykara Electricity System on 25th June 1954, *a.n.*

Appreciation

On the occasion of Sri K. T. Kuriyan, Divisional Electrical Engineer, retiring from service on 26th June 1954, the Chief Engineer for Electricity wishes to place on record his appreciation of the long, able and devoted service rendered by Sri Kuriyan to the Department. The good wishes of the Department go to him for his health and happiness in his retirement.

On the occasion of Sri Y. Dakshinamurthi, Chief Head Draftsman, retiring from service on 12th August 1954, *f.n.*, the Chief Engineer for Electricity wishes to place on record his appreciation of the long, able and devoted service rendered by Sri Y. Dakshinamurthi to the Department. The good wishes of the Department go to him for his health and happiness in his retirement.

The Chief Engineer for Electricity is also pleased to receive good reports for the year ending 31st December 1953 on the work of the following officers:—

Sri K. R. Radhakrishnan, Assistant Engineer (Electrical).

Sri A. T. Shresta, Assistant Engineer (Electrical).

Sri V. Viswanathan, Assistant Engineer (Electrical).

Sri A. Madanagopal Menon, Assistant Engineer (Electrical).

Sri S. Vaidyanathan, Assistant Engineer (Electrical).

Sri N. Subramanian, Assistant Engineer (Electrical).

Sri K. V. Narayanaswamy, Assistant Engineer (Mechanical).

Sri M. K. Unni Nair, Assistant Engineer (Electrical).

Sri R. Natarajan, Assistant Engineer (Electrical).

The Chief Minister, Sri Kamaraja Nadar, delivering the eighth inaugural address to Government Electrical Engineers' Association on 23rd September 1954 at 157, Mount Road, Madras-2.